TTV WAFER VALVE

20W3040ET

Wafer Butterfly Valve · DN450-1600

Ref. W4501600203040ET

Ductile Iron body, Stainless Steel disc and High Temperature EPDM seat. Supplied with a bare shaft and top flange for a gearbox or actuator.

- Face to face EN 558 Series 20
- Pressure tested to EN 12266-1, ISO 5208
- Tightness ISO 5208, zero leakage API 598
- ISO 5752 Connection F14 / F16 / F25 / F30
- Mounts between PN10/16 flanges



450-1600 mm	PN10-16 · ANSI 150	-20...+130 °C	High Temperature EPDM
NOMINAL SIZE (DN)	PRESSURE RATING	TEMPERATURE RANGE	SEAT MATERIAL

Construction.

MATERIALS OF CONSTRUCTION

BODY	SHAFT	DISC	SEAT
Ductile Iron	**Stainless Steel**	**Stainless Steel**	**High Temperature EPDM**
EN 1563 - GJS500-7	ASTM A182 F304	ASTM A351 CF 8M	

MOUNTING BETWEEN FLANGES
PN10/16 · ISO 7005, DIN 2501, BS 4504 · ANSI class 150: ANSI B16.5

FACE TO FACE
EN 558 Series 20 · ISO 5752 Series 20 · API 609 Table 1 · BS 5155 Series 4

PRESSURE TEST
EN 12266-1, ISO 5208: Body: 1.5×PN · Seat: 1.1×PN

TIGHTNESS TEST
ISO 5208, zero leakage API 598

TEMPERATURE
-20°C up to +130°C

TECHNICAL DATA

Dimensions & standards.

Wafer DN450-1600 | PN10-16 & ANSI 150
Valve with bare shaft

Model shown on source sheet: 20W3040 High Temperature EPDM. Source: TTV datasheet ref. W4501600203040ET, revision 0 (11-2-2019).

DIMENSIONAL DRAWING

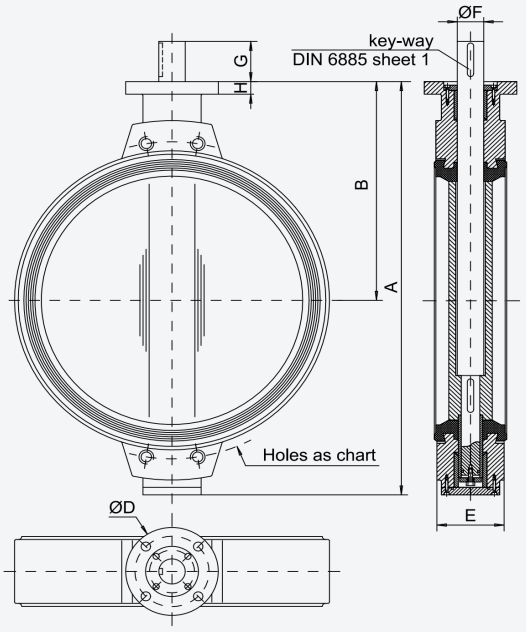

STANDARDS & RATINGS

Temperature
-20°C up to +130°C

Tolerances
ISO 2768-M

Face to Face
EN 558 Series 20
ISO 5752 Series 20
API 609 Table 1
BS 5155 Series 4

Pressure test according to
EN 12266-1, ISO 5208:
Body: 1.5×PN
Seat: 1.1×PN

Mounting between flanges
PN10/16
ISO 7005, DIN 2501, BS 4504
ANSI class 150: ANSI B16.5

Tightness test
ISO 5208, zero leakage API 598

Dimensions.

20W3040ET · DN450-1600

DN		A	B	D	E	F	G	H	L	PN10		PN16		ANSI150		ISO 5752 Connection	Weight Kg
mm	inch									K	N°×T1	K	N°×T1	K	N°×T1		
450	18"	736	390	175	114	50	80	25	140	565	4×M24	585	4×M27	578	4x1 1/8"	F14	87
500	20"	825	440	175	127	50	80	25	140	620	4×M24	650	4×M30	635	4x1 1/8"	F14	117
600	24"	965	507	250	154	60	90	30	165	725	4×M27	770	4×M33	749	4x1 1/4"	F16	177
700	28"	1100	575	300	165	60	90	30	254	840	4×M27	840	4×M33	863	4x1 1/4"	F25	258
750	30"	1150	600	300	190	65	110	30	254	900	4×M30	900	4×M33	914	4x1 1/4"	F25	296
800	32"	1248	655	300	190	65	110	30	254	950	4×M30	950	4×M36	978	4x1 1/2"	F25	330
900	36"	1325	685	300	203	80	110	30	254	1050	4×M30	1050	4×M36	1086	4x1 1/2"	F25	505
1000	40"	1454	754	300	216	80	110	30	254	1160	4×M33	1170	4×M39	1200	4x1 1/2"	F25	661
1100	44"	1580	815	300	216	80	110	30	254	1270	4×M33	1270	4×M39	1314	4x1 1/2"	F25	840
1200	48"	1721	873	300	254	100	110	35	254	1380	4×M36	1390	4×M45	1422	4x1 1/2"	F25	1020
1300	52"	1910	1005	350	360	120	130	35	298	-	-	-	-	1537	4x1 3/4"	F30	1650
1400	56"	1990	1025	350	360	120	130	35	298	1590	4×M39	1590	4×M45	1651	4x1 3/4"	F30	1900
1600	64"	2320	1190	415	360	150	160	40	356	1820	4×M45	1820	4×M52	1880	4x1 7/8"	F35	2750

(Note) dimensions and standards may vary without announcement. Colours are orientative.

Data supplied by TTV and provided for reference only. Specifications may change without notice – please confirm details with Actuation Valve & Control before ordering.

Need this valve automated?
Talk to our UK team about gearboxes, actuators and complete actuated valve packages.
actuation.co.uk